M2M LPBEM-7-27

Low Profile Mag Mount Antenna

05/05/2016 v2

Rugged low profile design
Covers global cellular / LTE bands
Removable magnetic mount

The Panorama LPBEM-7-27 is a range of low cost high performance magnetic mount antennas for temporary fit applications. At only 95mm (3.7”) high and protected by a robust high impact radome the antenna is almost impervious to daily wear and tear.

The LPBEM offers excellent performance across a wide bandwidth. The LPBEM-7-27 covers global cellular and LTE frequencies from 698-960 MHz and 1710-3800MHz making it an extremely versatile product. Although intended for magnetic mounting on a conductive ground plane the antenna can also be used for desk mounting applications with some impact on performance.

Supplied with a convenient 2m (6’) length of flexible RG174 cable the LPBEM is easy to install and compatible with a large range of modems.

Technical Drawing

LPBEM-7-27-2F shown

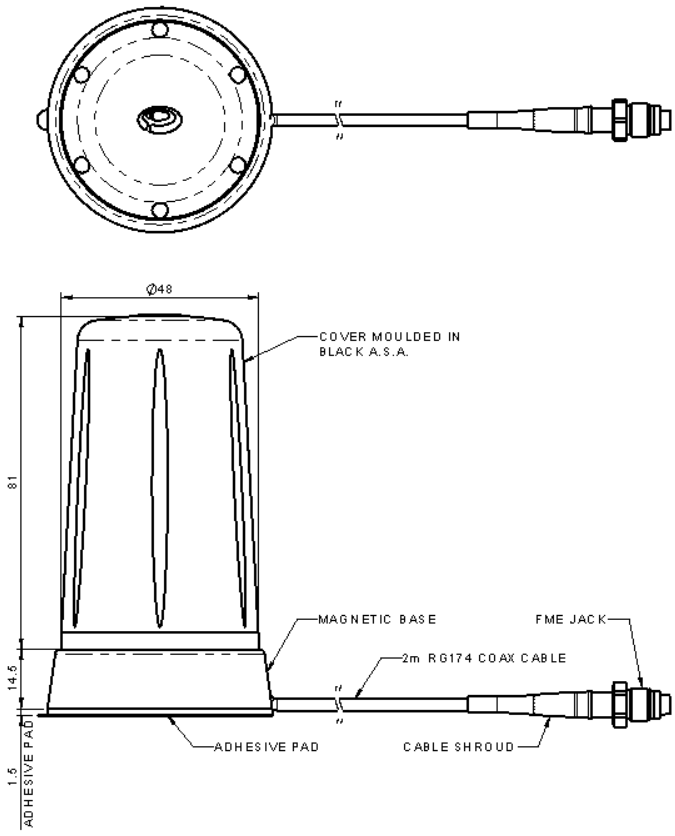

Typical VSWR*

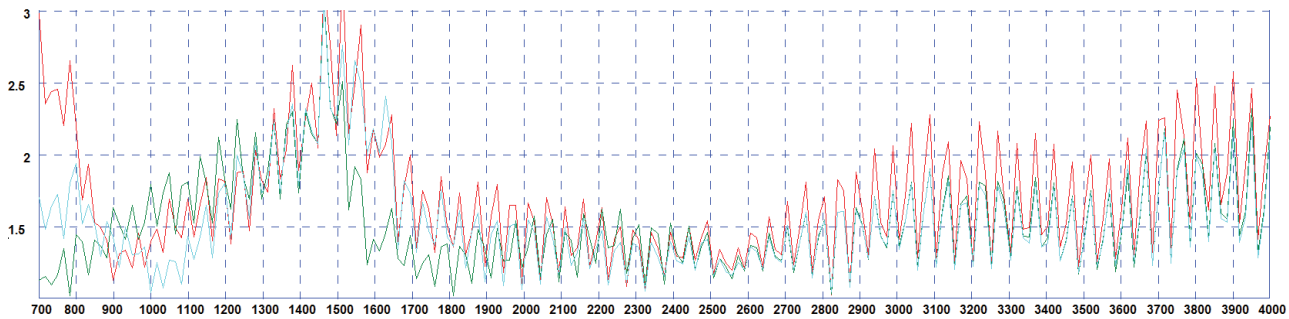

*Red VSWR measured with no ground plane with with 2m (6'6") of RG174 cable.
*Green VSWR measured on a 400x400mm (16x16") ground plane with with 2m (6'6") of RG174 cable.
*Blue VSWR measured on SP5-0470 mounting bracket with with 2m (6'6") of RG174 cable.

Part No.			
		LPBEM-7-27-2SP	LPBEM-7-27-2F
Electrical Data			
Frequency Range (MHz)		698-960 / 1710-3800	
Operational Band		700/800/900/1800/1900/2100/ 2400/2600/3500	
Peak Gain (excluding cable loss)	698-960 MHz	3dBi	
	1710-2170 MHz	4dBi	
	2170-2700 MHz	5dBi	
	3400-3800MHz	2dBi	
Typical VSWR*		<2.5:1	
Polarisation		Vertical	
Pattern		Omni-directional	
Impedance		50Ω	
Max Input Power (W)		25	
Mechanical Data			
Dimensions (mm)	Height	95 (3.7")	
	Diameter	48 (1.89")	
Operating Temp (°C)		-40°/+80°C (-40°/176°F)	
Material		UV stable ASA & Aluminium	
Colour		Black	
Approx Weight (g)		150	
Ingress Protection		Equivalent to IPX6	
Mounting Data			
Fixing		Magnetic mount	
Max Speed (KM/h)		160 (100 Mph)	
Cable & Connector Data			
Cable Type		RG174	
Cable Diameter (mm)		2.8 (0.1")	
Cable Length (m)		2 (6.6')**	

**Other cable lengths and connectors available on request.

PANORAMA ANTENNAS

Panorama Antennas Ltd
Frogmore, London, SW18 1HF, United Kingdom

T: +44 (0)20 8877 4444
F: +44 (0)20 8877 4477
E: sales@panorama-antennas.com
www.panorama-antennas.com

Waiver: The data given above is indicative of the performance of the product/s under particular conditions and does not imply a guarantee of performance. These specifications are subject to change without notice.
Copyright © Panorama Antennas Ltd. All rights reserved.